PUMP SELECTION CHECKLIST

What is Pump used for ?

_____

Product

Water □ Clean □ Solid Size_____

Other □ _____ Dirty □ Temp □

If other : SG _____

Viscosity _____

New? □ Replacement ? □

What was the old pump?_____

How good was the old pump? _____

Power available.

240 volt □ Air □

415v 3 phase □ Engine Drive □

Manual □ Automatic □

What makes it switch on/off? Pressure □ Flow □ Level □

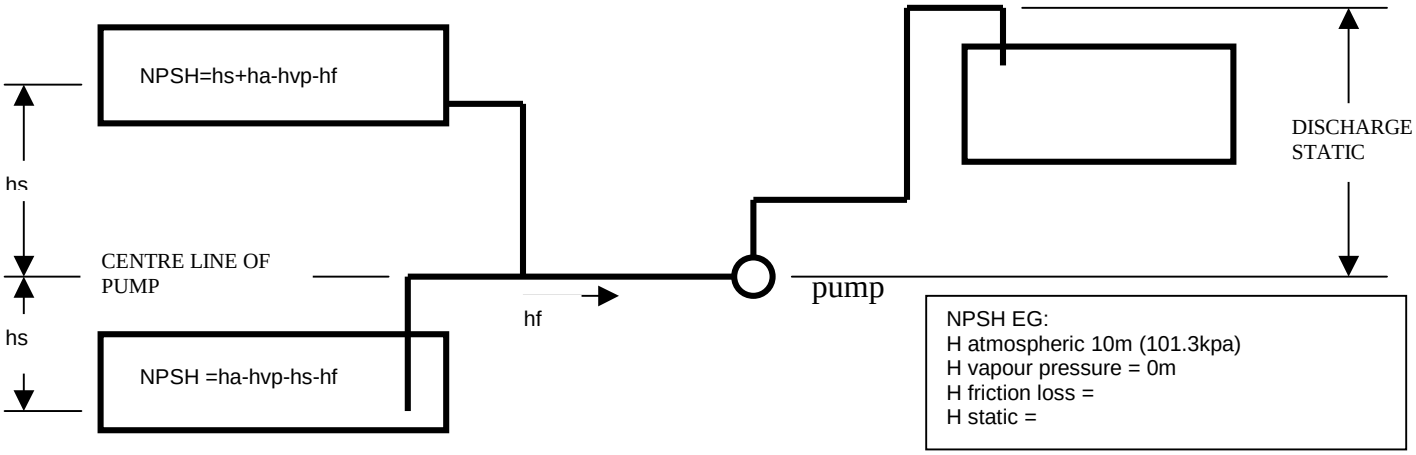

Suction

A) Flooded □ _____m?

B) Lift □ _____m?

C) Length □ _____m?

D) Diameter□ _____mm?

Type of pipe □ _____material

□ _____ class

Flow _____ units

Discharge

E) Discharge head □ _____m?

F) Function □ _____m?

- Length □ _____m?

- Diameter □ _____mm?

Type of pipe □ _____material